Roucaio

TABLE



In the nineteenth century, Italian masons brought the concrete faux bois technique to Provence, shaping concrete to imitate wood in garden ornamentation. Roucaio, 'rocaille' in Provençal, revisits this tradition with a log-like tabletop and intertwined branches for legs. A faux bois sculptor in Provence makes each piece by hand.

DIMENSIONS

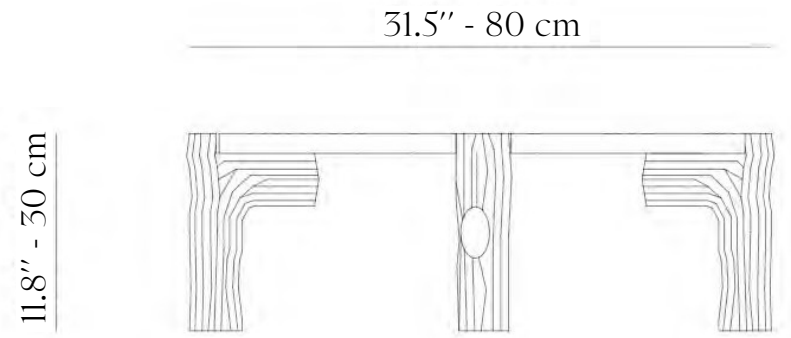

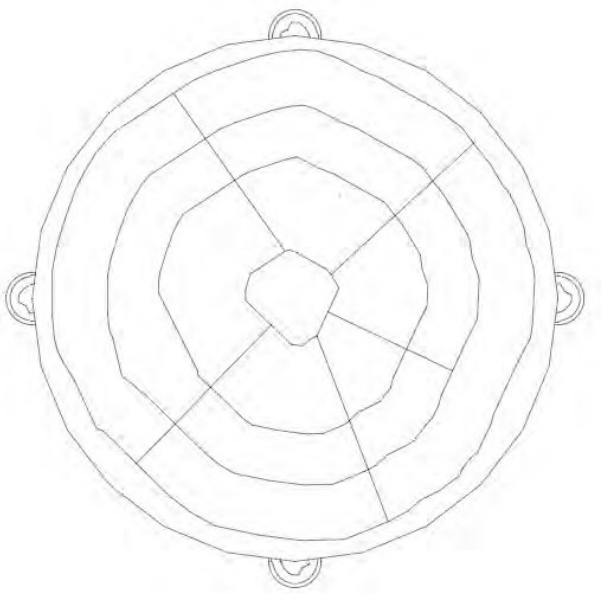

31.5'' - 80 cm

SPECIFICATIONS

WIDTH: 31.5'' - 80 cm

DEPTH: 31.5'' - 80 cm

HEIGHT: 11.8'' - 30 cm



CONCRETE FAUX BOIS

Each piece is handcrafted in Provence using traditional techniques. Variations in colour and finish reflect its artisanal character and make every piece unique.

Midi

www.editions-midi.com

Roucaio



Midi

www.editions-midi.com