Alòngui pèr dous

TWO-SEAT LOUNGE



Alòngui pèr dous is a two-seat interpretation of the traditional Riviera deckchair. Its stained and oiled solid oak frame supports an outdoor textile seat finished with leather edging. Inspired by nineteenth-century seaside furniture and the Villa Noailles in Hyères, it offers a comfortable place for two.

DIMENSIONS

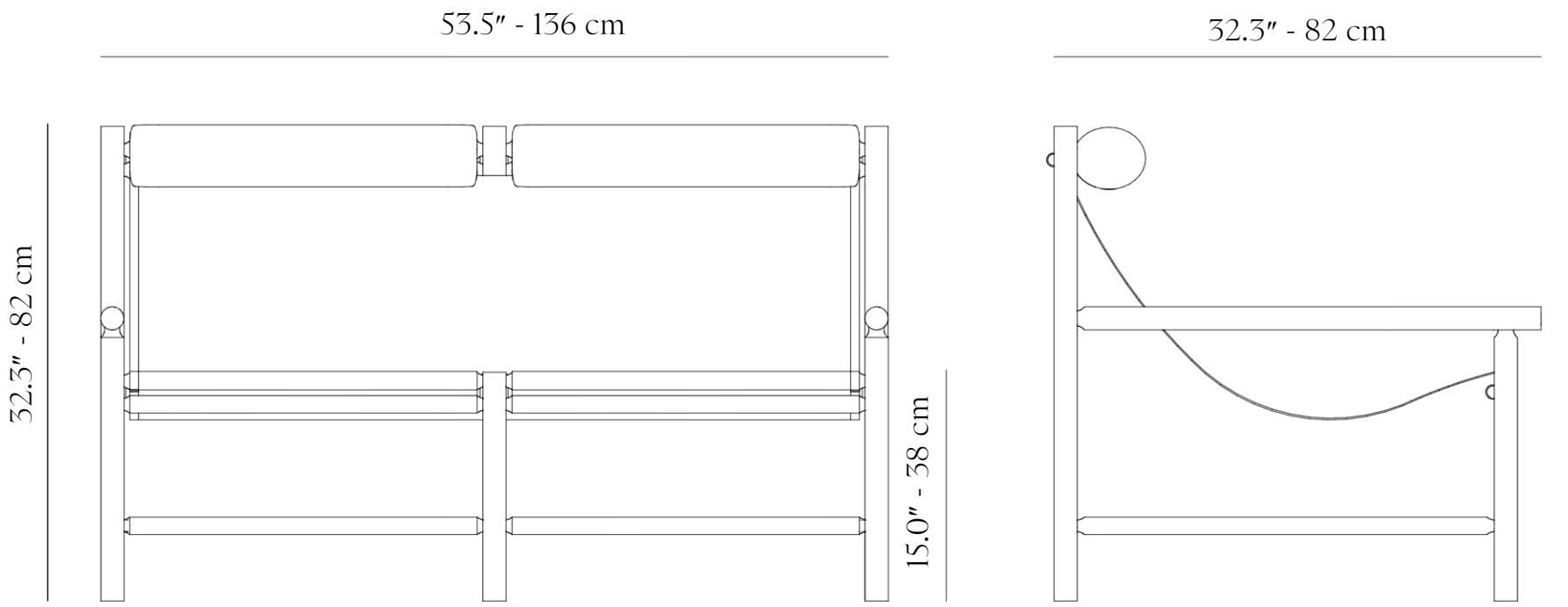

SPECIFICATIONS

WIDTH: 53.5″ - 136 cm

DEPTH: 32.3″ - 82 cm

HEIGHT: 32.3″ - 82 cm

SEAT HEIGHT: 15.0″ - 38 cm



OILED SOLID OAK

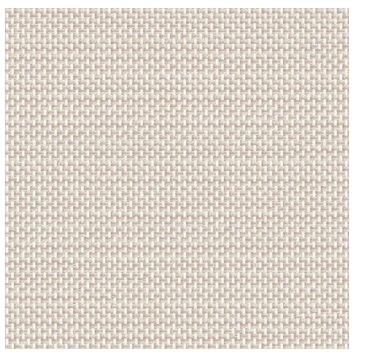

PREMIUM OUTDOOR TEXTILE

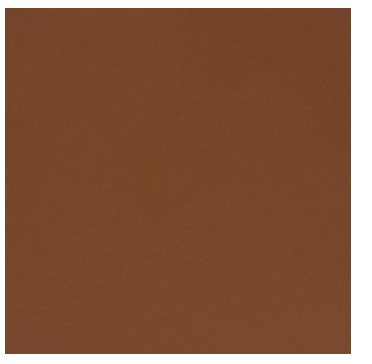

LEATHER

Each piece is handcrafted in Provence using traditional techniques. Variations in colour and finish reflect its artisanal character and make every piece unique.

Midi

www.editions-midi.com

Alòngui pèr dous



Midi

www.editions-midi.com