662,50

Alòngui pèr un

LOUNGE CHAIR





Alòngui pèr un revisits the deckchair found on the French Riviera in the nineteenth century and later celebrated at the Villa Noailles in Hyères. Its stained and oiled solid oak frame supports an outdoor textile seat finished with leather edging. A long cushion completes the design.

DIMENSIONS

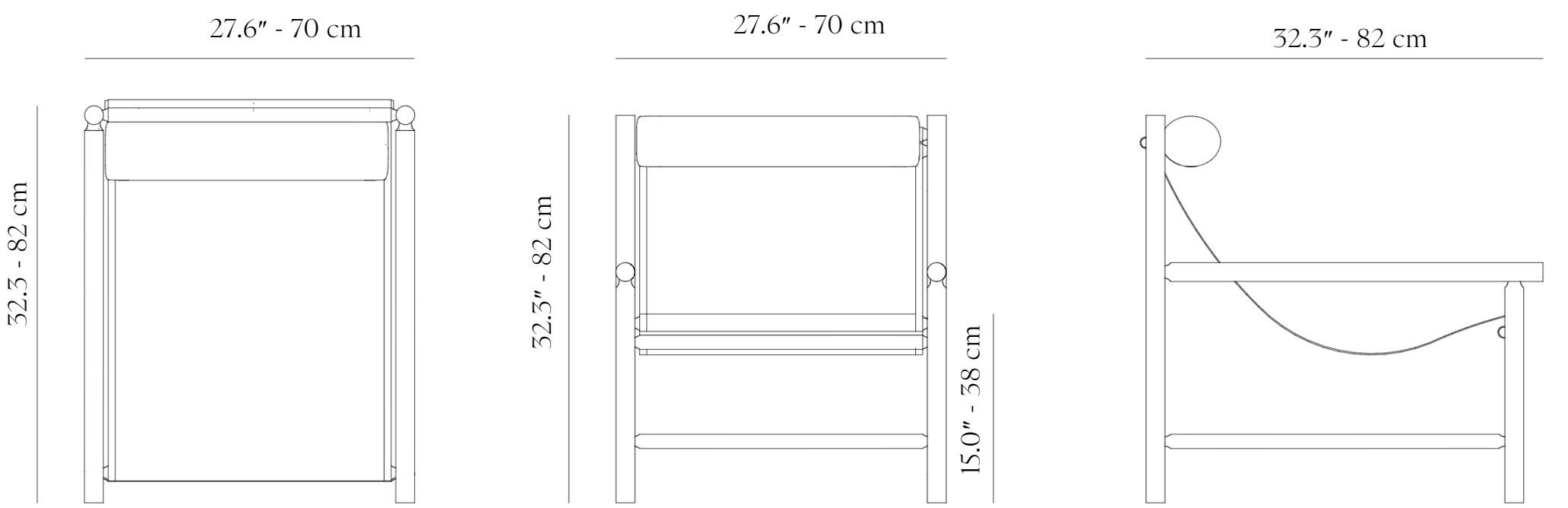

SPECIFICATIONS

WIDTH: 27.6″ - 70 cm

DEPTH: 32.3″ - 82 cm

HEIGHT: 32.3″ - 82 cm

SEAT HEIGHT: 15.0″ - 38 cm



OILED SOLID OAK

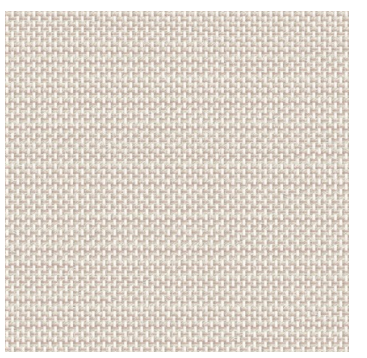

PREMIUM OUTDOOR TEXTILE

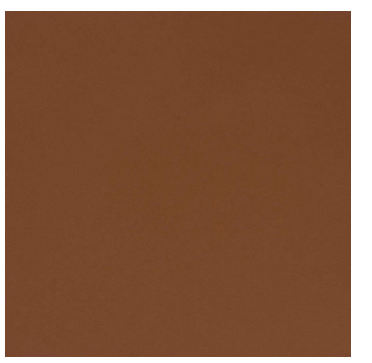

LEATHER

Each piece is handcrafted in Provence using traditional techniques. Variations in colour and finish reflect its artisanal character and make every piece unique.

Midi

www.editions-midi.com

Alòngui pèr un



Midi

www.editions-midi.com